NG WARP

www.promax.it

User Guide

PROMAX Motion & Control

The information contained in this document are for informational purposes only and are subject to change without notice and should not be interpreted by any commitment by Promax srl. Promax Ltd. assumes no responsibility or liability for errors or inaccuracies that may be found in this manual. Except as permitted by the license, no part of this publication may be reproduced, stored in a retrieval system or transmitted in any form or by any means, electronic, mechanical, recording or otherwise without prior permission Promax srl.
Any references to company names and products are for demonstration purposes only and does not allude to any actual organization.

Rev. 1.00.0

1 General characteristics

The system NGWARP (Next Generation System WARP) is a numerical control system based on microprocessor from Freescale ColdFire MFC54415. It is a modular system that can be made as needed to achieve the machine, which according to the CPU, called NGWARP, with a variable number of expansions of I / O and motion control, called NGIO and NGPP.
The NGWARP CNC is equipped with:

NGWARP ONLY CPU

- ***Microprocessor MFC 54415 @ 250MHz***
- ***15 Mb Flash***
- ***16+64 Mb RAM***
- ***32 Kb RAM with Battery and clock***
- ***1 ETHERNET port 10/100 Mb RJ45***
- ***1 ETHERCAT port RJ45***
- ***2 Serial ports RS232 (1 RS485)***
- ***2 CAN OPEN ports Master/Slave***
- ***8 Analog Inputs 12 bit 0-10 Vdc or 4-20mA***

NGIO Expansion (Max 8) **1)**

- ***16 Digital Inputs PNP 24 Vdc***
- ***14 Digital Outputs PNP 24 VDC up to 1 A***
- ***2 Encoder Channels line drive***
- ***2 Analog Outputs +/- 10V 12 bit***
- ***2 Relè Outputs up to1 A***

NGPP Expansion (Max 8) **1)**

- ***4 STEP/DIR Channels at 25 Mhz Position Mode e Interpolation Mode. Line Drive***
- ***2 Analog Outputs +/- 10V 12 bit***
- ***16 Digital Inputs PNP 24 Vdc***
- ***14 Digital Outputs PNP 24 VDC up to 1 A***
- ***4 Digital Fast Input***

1) The maximum number combined expansions (NGIO and NGPP) is 8

2 Order code

ORDER CODE NG 35	
NGWARP/ ■ - ■ - ■	
A	4 - Analog Inputs 10V 4 - Analog Inputs 4-20 Ma
B	8 - Analog Inputs 10V
C	8 - Analog Inputs 4-20 Ma
0	2 - RS232
1	1 - RS232 1 - RS485 on SER2
0	**Without ETHERCAT**
1	**With ETHERCAT**
ORDER CODE NGIO	
NGIO	
ORDER CODE NGPP	
NGPP/	
0	Without Analog Outputs
1	2 - Analog Outputs +/- 10V

3 NGWARP connections

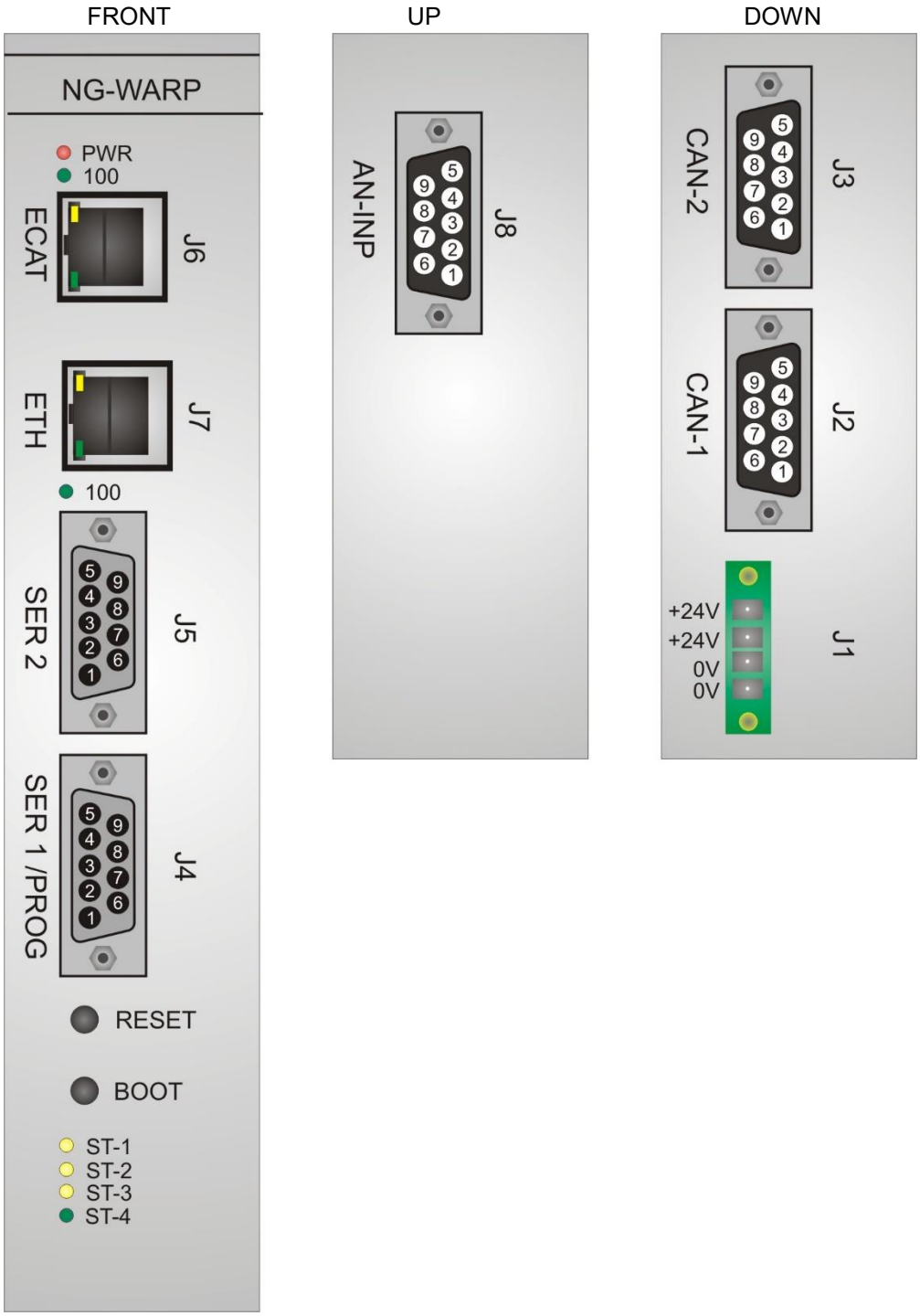

4 Connections description

4.1 Voltage supply

The NGWARP uses two separate Voltage supply:

- ***Logic section, ports PWR (J1) or ports CAN-1 e 2 (J2 e J3);***
- ***Digital Outputs, ports J11 and J12 NGIO and NGPP***

You can see the relative chapter about the digital output supply **Chapr. 7.2**
About the Logic section supply, NGWARP needs it for the normal functioning.

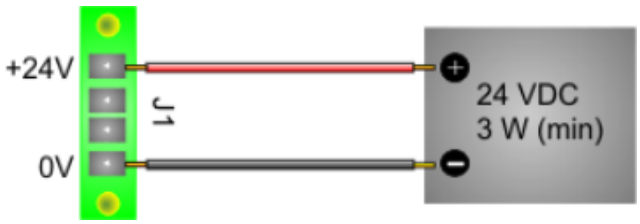

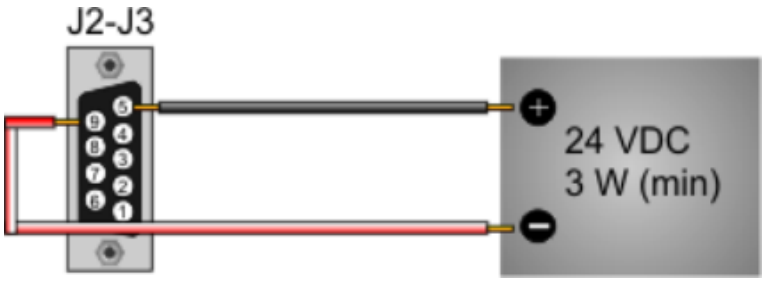

4.1.2 Electric characteristics

	U.m.	Min	Standard	Max
Supply voltage	Vdc	12	24	35
Power consumption (@24Vdc)	W		2,6	
Power for each NGIO/NGPP	W		3,5	

THE SYSTEM IS PROTECTED FROM POLARITY INVERSION

WARNING
DO NOT EXCEED THE MAXIMUM VOLTAGE VALUE ADMITTED BECAUSE THE CARD CAN BE DAMAGED

4.2 Serial ports

The serial ports on the **NGWARP** allow communication with external devices to the control, PC-type, PLC and other.

- **SER1-PRG**: is normally used both for the download of the programs on the control, both for the debugging from a PC application. It is also the port to use for updating the firmware

- **SER2**: Can be used for communication with other devices, such as a PLC, inverters or other. **CAN BE CONFIGURED RS485 MODE**.

For the electrical signal, the serial ports are in compliance with RS232/RS485.

Use a **CABLE WITH SHIELD** for serial ports connections
Connect the **SHIELD to PIN 5** SER1 or SER2 to NGWARP ports

Generally the RS232 connection, uses a NULL MODEM cable (pin 2,3,5) CROSSOVER (with inversion on pin 2,3)

Always check the external device that type of connection it accepts

RS232

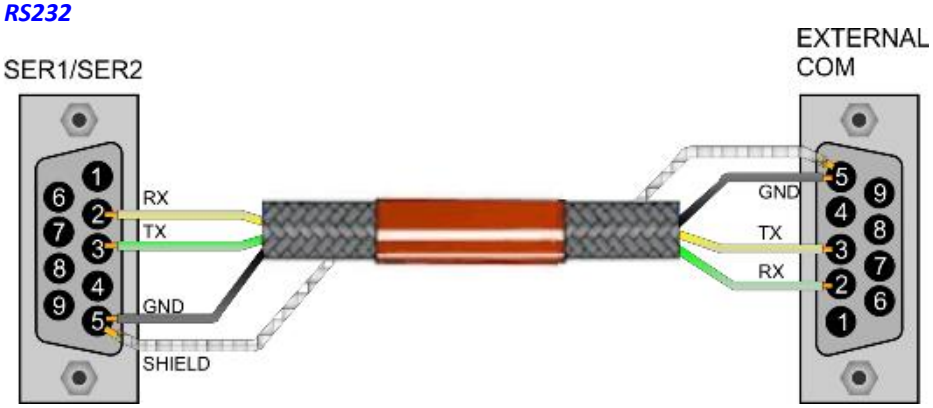

RS485

Normally the GND pin is not connect

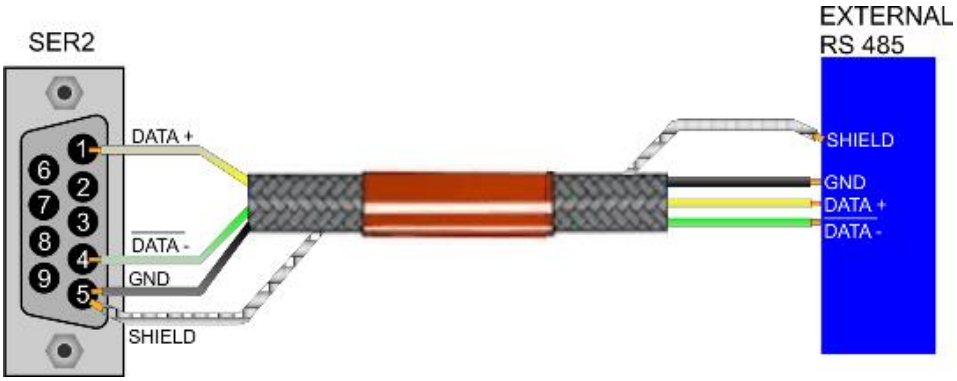

4.2.1 Connections J4 SER1/PROG – J5 SER2

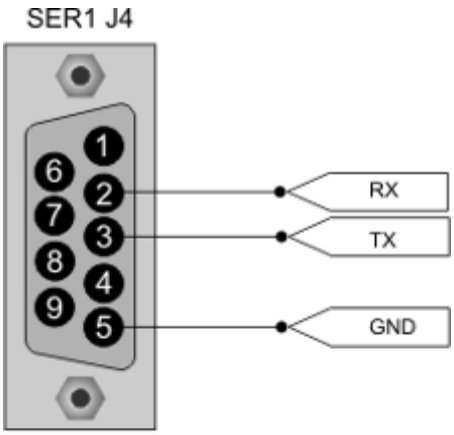

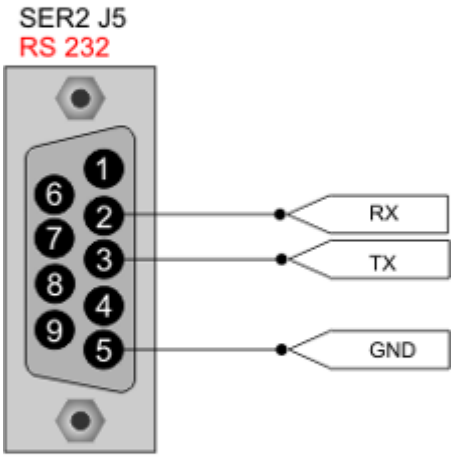

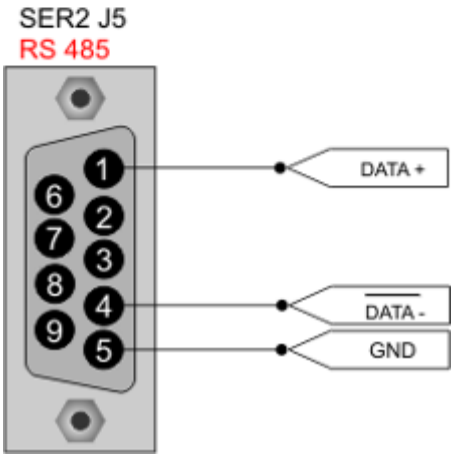

WARNING
DO NOT INSERT THE CONNECTORS PORT WHEN THE POWER IS ON BECAUSE THE CARD CAN BE DAMAGED

4.3 CAN BUS

The CAN-BUS port, allows the NGWARP to communicate with other devices, like motor drives, I/O various slave devices, field-bus encoders and others.
Communication made by CAN-OPEN protocol and its specific standards DS401 and DS402 about supported objects and modes.
On data exchange level, it complies the DS301 standard .
The two ports present on the NGWARP, differ by the use. The CAN-1 port (J2) can be used to look the NGWARP like CAN-BUS Master. The CAN-2 port (J3) instead, can be used in two different ways:

- ***like CAN-BUS extension, allowing to extend the data exchange amount in a NGWARP CAN Master;***
- ***like a slave CAN-BUS, allowing to use NGWARP as a slave;***

By the electric side, both CAN-BUS ports are conformed the ISO-11898-24V standard.
On the NGWARP it's also present the line-terminating resistor on both ports, only by connecting together pin 1 and 2.

4.3.1 Connections

Is possible insert the TERMINATOR RESISTOR, connecting the PIN 1 and 2 of J2 or J3

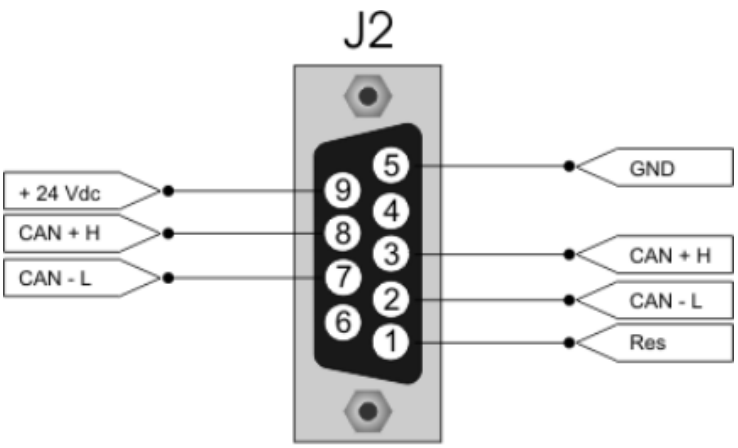

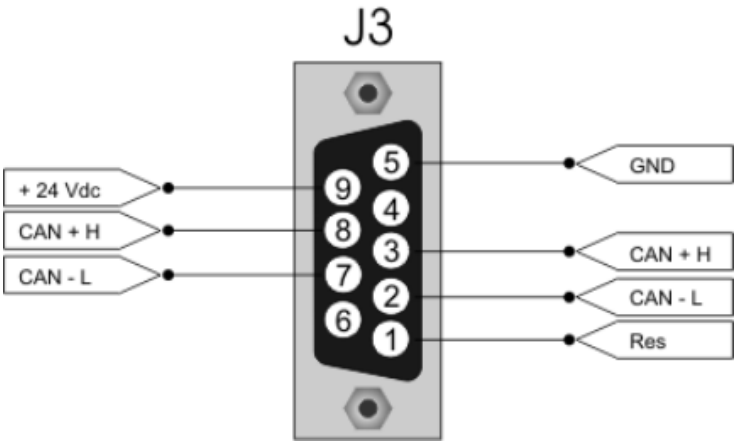

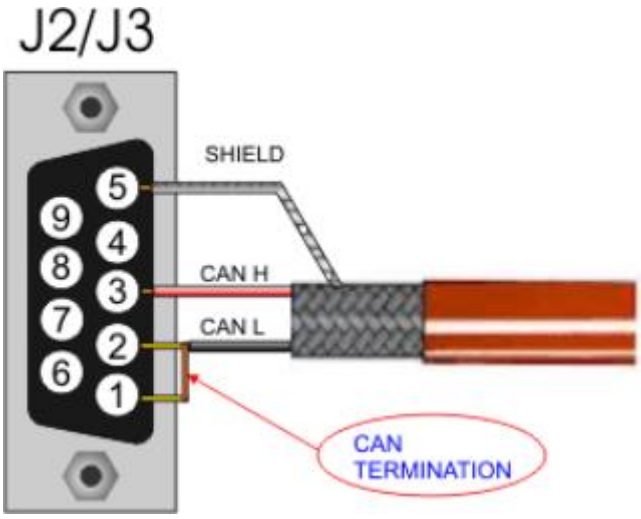

WARNING

If the NGWARP board is configured as MASTER, insert always the TERMINATOR RESISTOR
If the NGWARP is configured as SLAVE, insert the TERMINATOR RESISTOR if the board is the last node in the CanBus.
In another situations, remove the TERMINATOR RESISTOR

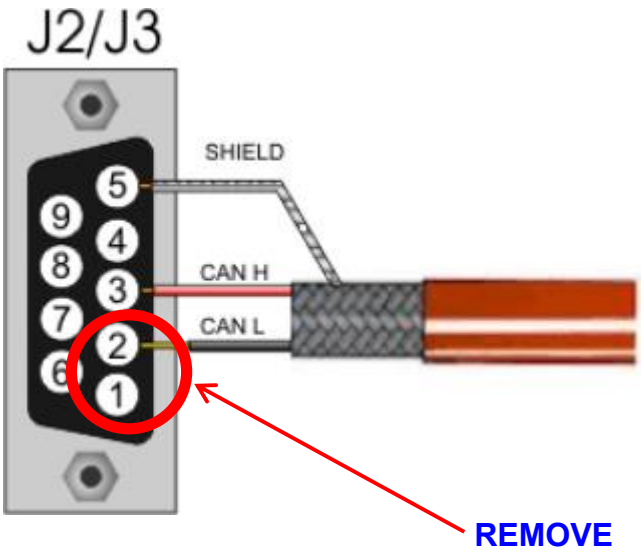

WARNING
USE THE CABLE FOR CANOPEN COMMUNICATION

4.3.2 CanOpen Max PDO Number

Normally the max PDO number managed by NGWARP Canopen system , is **10**.
It is a total for PDO Rx and PDO Tx ex:

7 → PDO Tx
3 → PDO Rx

In the NGWARP System, you can increase, the PDO number, connecting in parallel mode, the two Can Bus ports. In this mode you can use up to ***26 PDO RX and TX*.**
(the Second CanBus port will not available for other uses)
Besides the NGWARP is able to manage the PDO in soft mode (mode interrupt)
That allows to use a unlimited PDO number

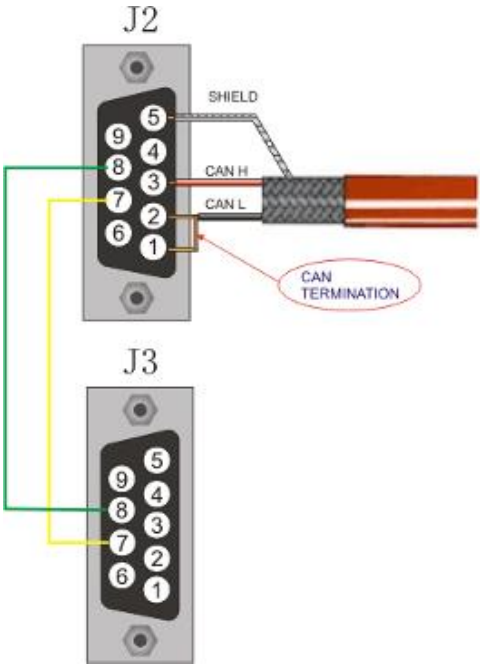

After you must enable in the CanOpen configurator the limit PDO over 10:

1) Launch the VTB and load the project ***.pxp*** where you desire use up to 26 PDO
2) Launch the CanOpen Configurator:
3) Select the "Option → Configuration" (Opzioni → Configurazione) 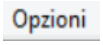

4) Changes the PDO number in **26 and press "Ok"**

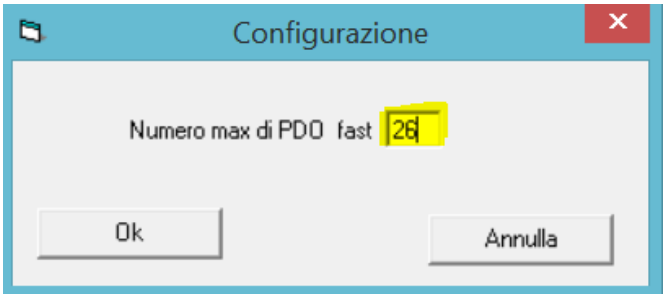

4.3.3 CanOpen Cable

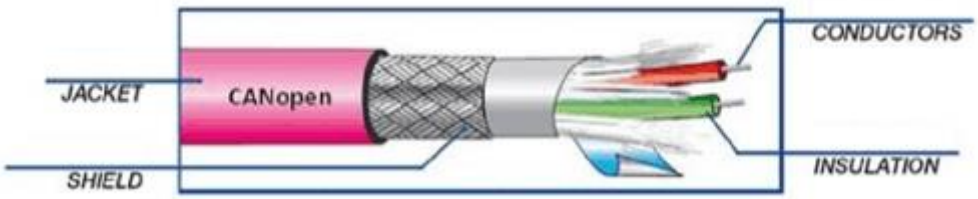

CONDUCTORS

ELETTRIC RESISTANCE

22AWG: < 55,4 Ohm/Km
21AWG: < 43,6 Ohm/Km

PAIR CAPACITY

50 pF/m

IMPEDENCE

120 Ohm

TRASMISSION SPEED-CABLE LENGTH

Baud rate 1Mb Length Max 25 Mt
Baud rate 800 Kb Length Max 50 Mt
Baud rate 500 Kb Length Max 100 Mt
Baud rate 250 Kb Length Max 250 Mt
Baud rate 125Kb Length Max 500 Mt

VOLTAGE EXERCISE

30 V

4.4 Ethernet Port

The Ethernet port, allows the NGWARP to communicate with other devices, llike PC and others. On data exchange level, it complies 10 BaseT and 100 BaseT standards.
About protocols, it can be used in many ways:

- ***NGWARP to PC communication, about on-line assistence, software and firmware download and other. In this case it's used a PROMAX specific protocol***
- ***motor drives, I/O slave and other, with ETHERCAT ptotocol***
- ***PLC and other devices communication, with ModBus protocol TCP/IP***

4.4.1 Connections

The on board connector, complies the RJ45 standard,
It's recommended to use PC with Ethernet ports complies this standard. It's recommended to use cables length conformed the standard.
The connection cable can be **CROSSOVER** or **NORMAL**
The port is automatically adapted to cable type

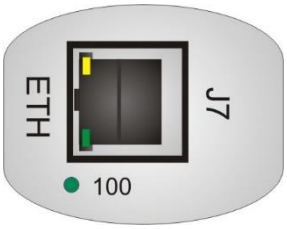

WARNING
USE THE CABLE FOR ETHERNET COMMUNICATION

4.5 EtheCat Port

The EtherCat port (CoE Can Over EThercat) on NGWARP J6, is able to control all devices that use this protocol ex: Drives,I/O etc.

4.5.1 Connections

The on board connector, complies the RJ45 standard,
It's recommended to use cables length conformed the standard.

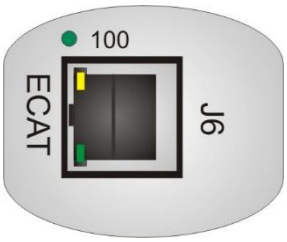

4.6 Analog inputs

The analog inputs presents on the NGWARP, can be configured as a 0-10Vdc voltage input or 0-40 mA current input (standard 4-20mA). The configuration can be made on every single input, thus the system it's very flexible.
The input voltage, can't exceed the maximum over 0,2V.
It's possible to read 12V or 24V analog voltage, only by inserting a limiting resistor previous the input. The required resistor value, is shown in the example.

4.6.1 Connection Analog Inputs J8

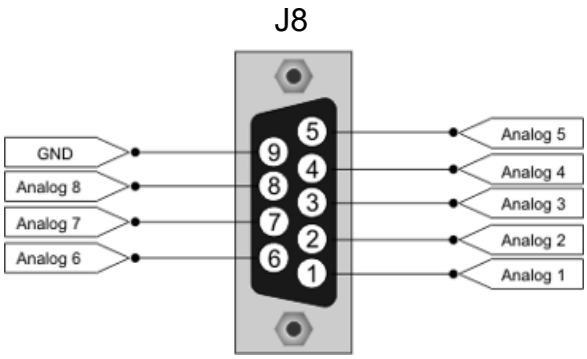

4.6.2 Input Resistance

	MIN	TIPICA	MAX
VDC	25 KΩ		72 KΩ
4-20 Ma		175 Ω	

4.6.3 External resistance for voltages other than 0-10V or 4-20Ma

VIN	Rext
0-12 V	63 KΩ
0-24 V	424 KΩ

4.6.4 Connection example

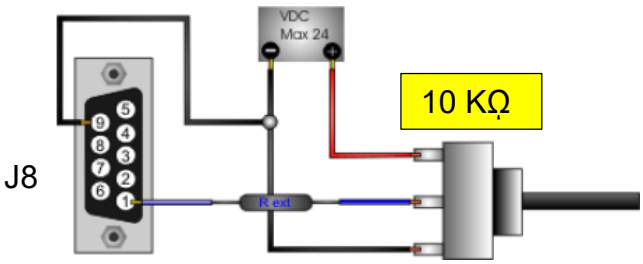

WARNING
IF THE VOLTAGE, EXCEEDS 0,2 Volt THE MAXIMUM VALUE SELECTED THE ANALOG INPUT, CAN BE DAMAGED

5 Buttons Boot and Reset

5.1 Button Boot – LOG-MEM

When the NGWARP is in running mode (VTB Application in execution) and are presents some messages in the LOG-MEM (Green Led ST-4 3 flash and 1 pause), if this Button is pressed for 2 Second, the LOG-MEM memory will be cleared and the ST-4 Led will return to flash in regular mode (1 second)

5.2 Boot Safe Mode (only for Ethernet)

Generally for upload the VTB Application by ETHERNET port, is necessary that the current application that run in NGWARP isn't crashed.
Some times, because there are some programming errors, the VTB application in NGWARP can be crashing and this does not allow to upload a new application from Ethernet port (in this cases is used the Manual Boot and SER1/PROG RS232)
NGWARP allows to use the **Boot Safe Mode** for use the ETHERNET port for upload the VTB Application.
Procedure:

1) Press **BOOT** and **RESET** simultaneously
2) Release button **RESET** only (led ST-4 will flash quickly)
3) Keep pressed button **BOOT** for 4 seconds until the led ST-4 will flash at 1 second frequency
4) Now you can use the NGPROG in ETHERNET for upload the VTB Application

5.3 Manual Boot IN RS232

Generally the NGAWARP allows to automatic VTB upload application.
Some times this procedure can't work (because the current VTB application in NGWARP is crashed)
Procedure for Manual Boot:

1) Press **BOOT** and **RESET** simultaneously
2) Release button **RESET** only (led ST-4 will flash quickly)
3) Release button **BOOT** in a time of 2 seconds
4) Now you can use the NGPROG in RS232 for upload the VTB Application

5.4 NGPROG

The application was developed by Promax NGPROG to allow the update software and firmware of the new controls based on µP ColdFire.

5.4.1 Upload firmware

1) Press button **"FIRMWARE MANAGEMENT"** on NGProg
2) If you use **"UPDATE da File"** use the standard windows Browser for find the .SREC file
2) If you use "UPDATE da Server" you must have a intenet active connection, NGPROG search in Promax server the new version of firmware
3) Select the serial port to PC and **NGWARP** board type
4) Start the upload firmware

5.4.2 Upload VTB application

1) Select the **NGWARP** Board
2) Select the COM on PC
3) Selct the .SREC file by button **"LOAD"**
4) Start the upload by button **"Upload Application"**

6 Status Leds

ST-1 (led yellow Slave CanOpen or RS232):

- **Blinking** – Activity RS232 port SER2
- **ON** – NGWARP in SLAVE CANOPEN MODE
  (this modality is activated from VTB Application)

ST-2 (led yellow - ETHERCAT):

- **OFF** – None ETHERCAT activity
- **3 flash on RESET and after OFF** – ETHERCAT not enabled
- **Short Flash** – Configuration devices ETHERCAT in progress
- **Continous blinking** – ETHERCAT configuration ERROR
- **ON** – ETHERCAT configuration OK

ST-3 (led yellow – TASK PLC):

- Its intensity depends of TASK PLC burst CPU TIME
  (If it is ON fixed, the PCL TASK BURST TIME is so high, DANGEROUS situation)

ST-4 (led green):

- **Fast Flash** – NGAWRP in BOOT mode
- **Flash at 1 sec** – VTB Application normal run
- **ON or OFF** – Problems in VTB application
- **3 Flash and 1 Pause** – Errors in LOG-MEM

PWR (led red):

- Power Supply OK.

100 (led Green):

- ETHERNET and ETHERCAT ports at 100 Mb

7 NGIO connections

The NGIO board, is an expansion for NGWARP local BUS:

- ***16 Digital Inputs***
- ***14 Digital Outputs***
- ***2 Encoder Channels Line Drive***
- ***2 Analog Outputs +/- 10V***
- ***2 Relè Outputs up to 1 A***

Can Be insert up to 8 expansions NGIO

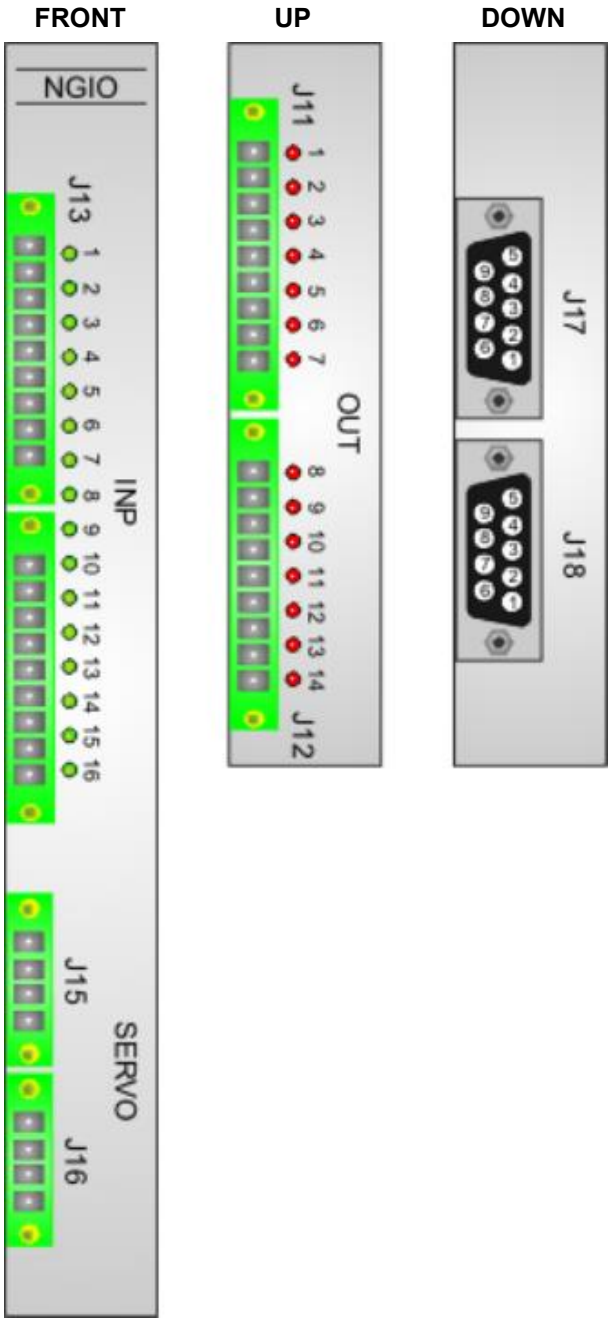

7.1 Digital inputs

The digital inputs of NGIO, are PNP and opto-isolated. Thes have to have 24Vdc voltage on it, GND refered, to activate the input.

7.1.1 Electric characteristics

		U.m.	Min	Standard	Max
On state		Vdc	10	24	28
Off state		Vdc	0		4
Delays	activation	ms			3 (@ 24Vdc)
	deactivation	ms			2 (@ 24Vdc)
Power consumption		mA	4 (10Vdc)		14 (@ 28Vdc)

7.1.2 Connections

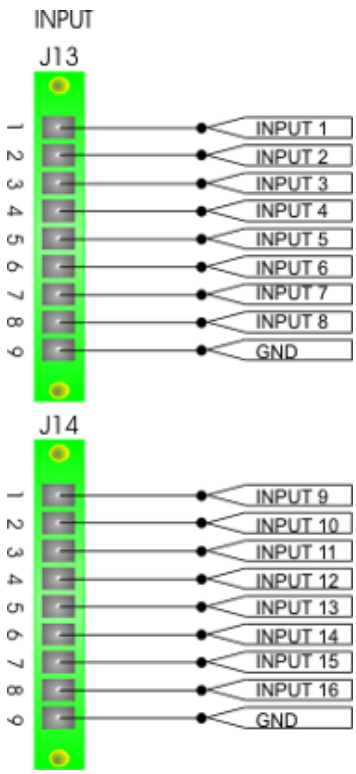

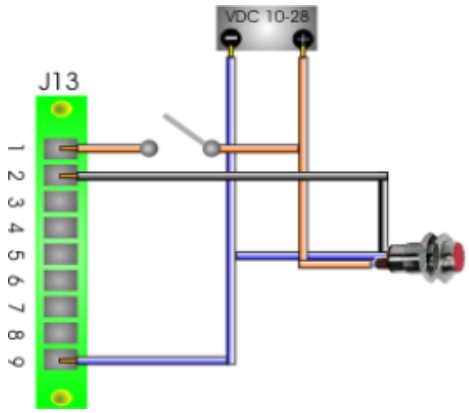

WARNING
DO NOT EXCEEDS THE VOLTAGE LEVEL ABOVE DESCRIBED

7.2 Digital output

Digital outputs are PNP opto-isolated type. Thus they must be supplied with a separated direct voltage. Load will be drived by a transistor, who, when it will be activated, will supply the applied voltage on it.
On the NGIO it's already present a protecting diode, but when we have a high inductive load or the connection between output and load exceed 3mt , it's recommended to put also another diode near the load (like 1N4007 or other similar).

7.2.1 Electric characteristics

		U.m.	Min	Standard	Max	Note
Supply		Vdc	10	24	30	
Load		A		1		Continuative (T_{amb} 25°)
		A		2		Duty Cycle 25% (T_{amb} 25°)
		A			6	Pick (10 ms not repeat)
Delays	Activation	µs			5	
	Deactivation	µs			30	

7.2.2 Connections

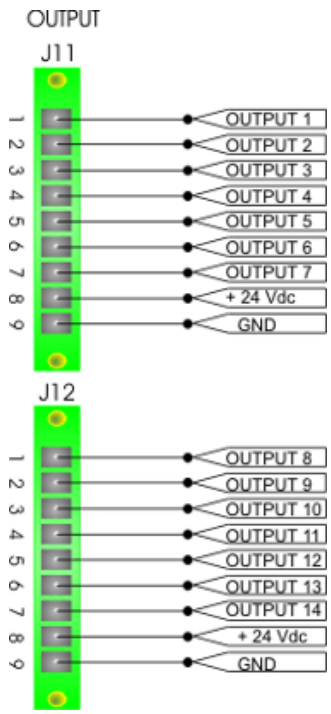

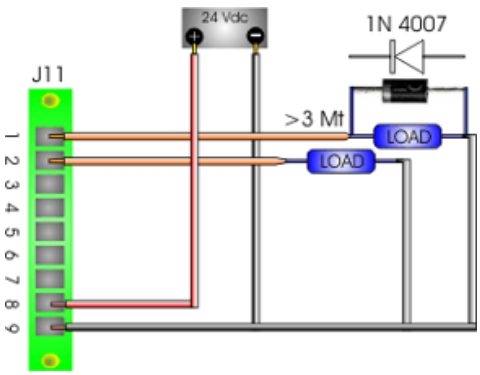

WARNING
DO NOT EXCEEDS THE VOLTAGE LEVEL ABOVE DESCRIBED

THE DIGITAL OUTPUTS, ARE NOT PROTECTED BY OVERLOAD OR SHORT CIRCUIT

7.3 Encoder inputs

The encoder (or optical line) must be connected with a shielded cable, to prevents electromagnetic interference . It's also recommended to have separated cable for each encoder and put far away the connection by interferences sources (inverters,high voltage cable, AC motors, etc.).
NGIO is ready to use LINE-DRIVE encoders, also supplies the +5Vdc source voltage. It can't be used with PUSH-PULL or OPEN-COLLECTOR encoders.
In case of motor-drives encoder simulation, is not necessary to connect the Vdc supply, but only the GND.

7.3.1 Electric characteristics

		U.m.	Min	Threshold	Max
On voltage level		Vdc	0		0,8
Off volatge level		Vdc	4		12
R input		Ω	6		
Frequency		KHz			800
T0 PNP	On level	Vdc	2,5	2,2	7,7
	Off level	Vdc	0		1,5
T0 NPN	On level	Vdc	0	1,4	1
	Off level	Vdc	2		7,7

7.3.2 Electric characteristics +5vdc output encoder supply

Channel	Min	Max	Output Cuurent
Ch1 J17	4,75 Vdc	5,25 Vdc	100 Ma
Ch2 J18	4,75 Vdc	5,25 Vdc	100 Ma

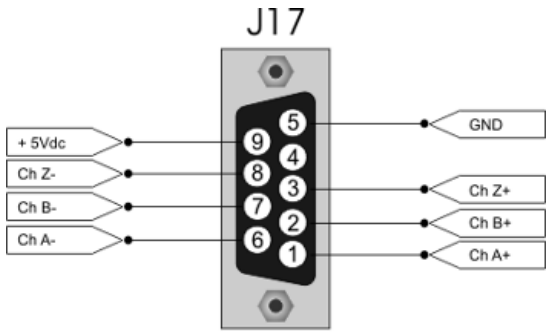

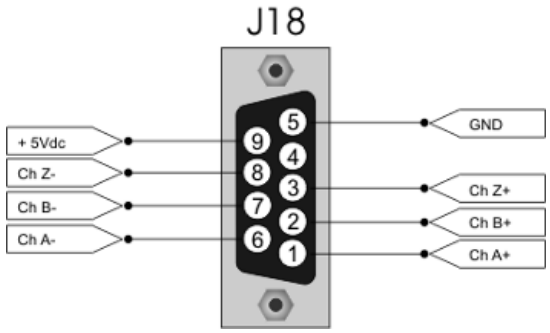

7.3.3 Example

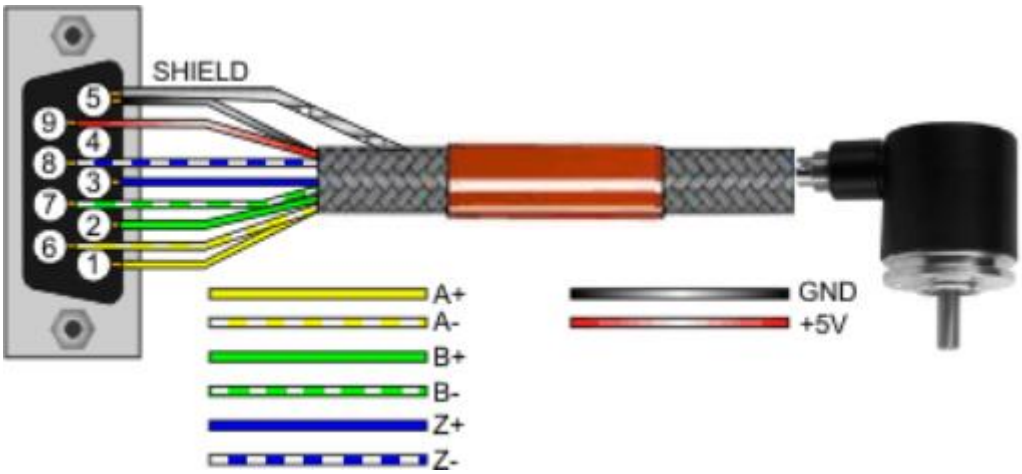

WARNING
USE A CABLE WITH SHIELD FOR THE CONNECTIONS

7.4 Servo Analog Outputs

For the analog motor drives control, in analog speed mode, the NGIO supplies a +/-10V 12bit analog output and a two relé contact output. It's recommended to have a single cable for each motor drive.

7.4.1 Electric characteristics

		U.m.	Min	Standard	Max
Analog output	Output voltage	Vdc	-10		9,995
	Output impedence	Ω	250		290
Relé contact	Voltage	Vdc			35
	Current	A			1

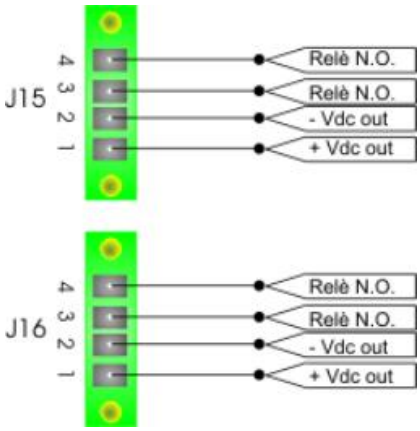

WARNING
USE A CABLE WITH SHIELD FOR THE CONNECTIONS

8 NGPP Connections

The NGPP board, is an expansion for NGWARP local BUS:

- ***16 Digital Inputs***
- ***14 Digital Outputs***
- ***4 STEP/DIR Channels Line Drive 25 Mhz Clock***
- ***2 Analog Outputs +/- 10V***
- ***4 Digital Inputs Fast Input***

Can Be insert up to 8 expansions NGPP

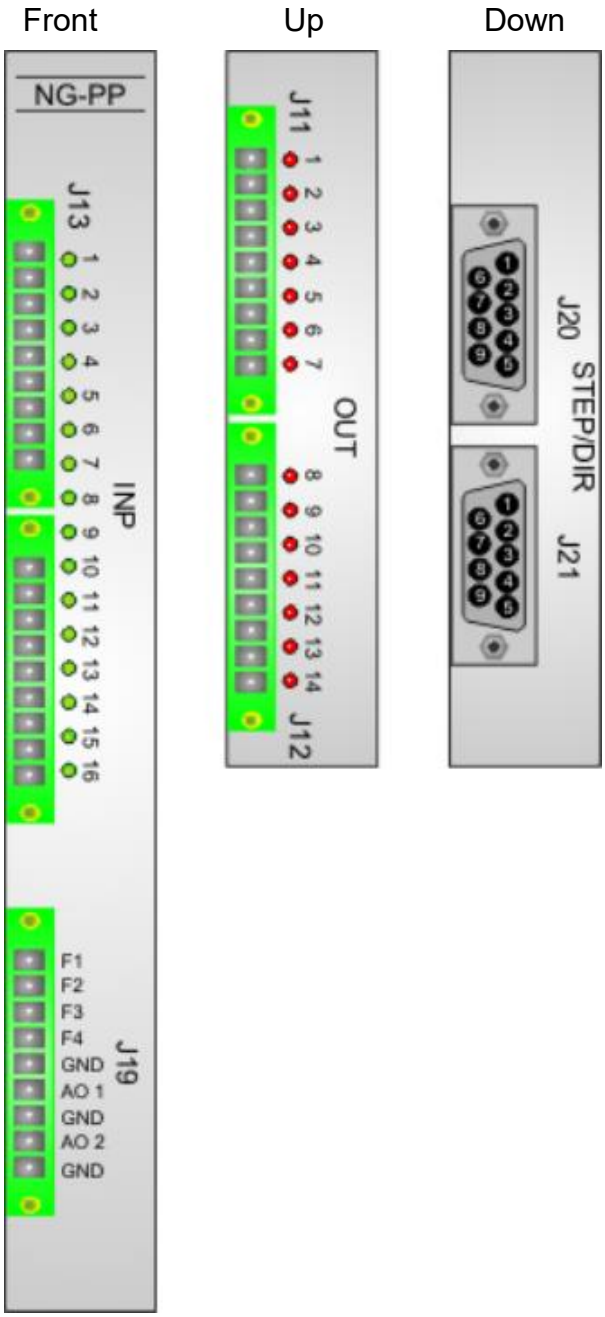

8.1 Digital Inputs J13 - J14 NGPP

REFER TO CHAPTERS 7.1

8.2 Digital Outputs J11 - J12 NGPP

REFER TO CHAPTERS 7.2

8.3 STEP/DIR Outputs

The card NGPP can use, up to four outputs STEP / DIR up to **25 Mhz** Clock.
The outputs can be configured with 5V or LINE DRIVE.

OUTPUT DIFFERENTIAL	**MIN 3V MAX 5V**
FREQUENCY	**MAX 25 Mhz**

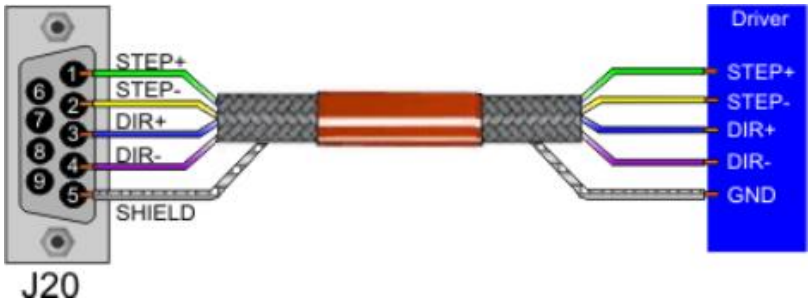

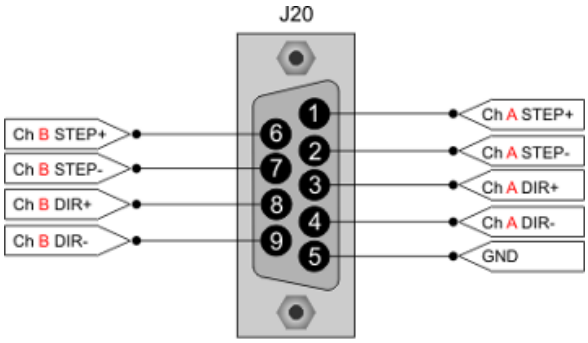

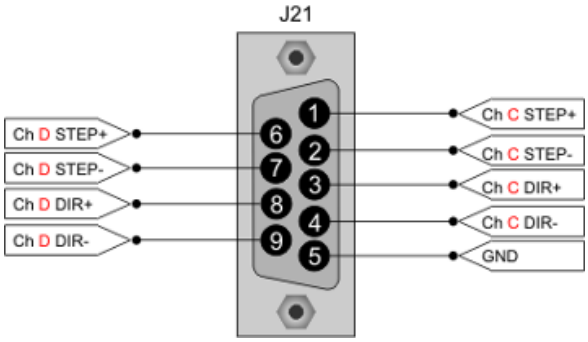

WARNING
USE A CABLE WITH SHIELD FOR THE CONNECTIONS

8.4 Fast Digital Inputs J19

The NGPP Board use 4 Fast Digital Inputs not optoisolated.

8.4.1 Electric characteristics

		U.m.	Min	Standard	Max
State On		Vdc	3	24	30
State Off		Vdc	0		1
delay	ON Level	us	120 (@ 24Vdc)		600 (@ 5Vdc)
	OFF Level	us	120 (@ 24Vdc)		600 (@ 5Vdc)
Power (res Input 10 K)		mA		2.5 (24Vdc)	

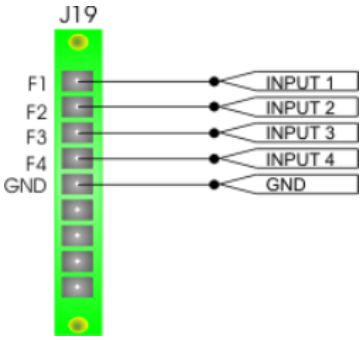

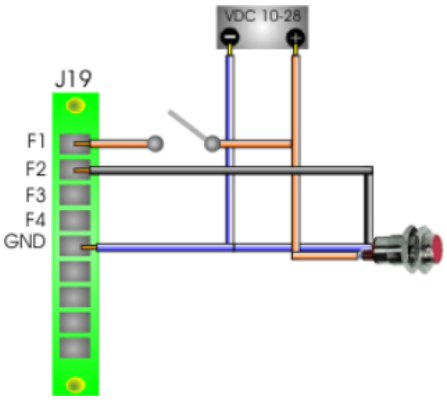

8.5 Analog Outputs J19

The NGPP allows 2 analog outputs +/-10V.

8.5.1 Electric characteristics

		U.m.	Min	Standard	Max
Analog output	Output voltage	Vdc	-10		9,995
	Output impedence	Ω	250		290

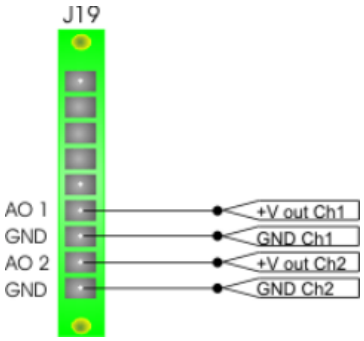

WARNING
USE A CABLE WITH SHIELD FOR THE CONNECTIONS

9 Dimensions

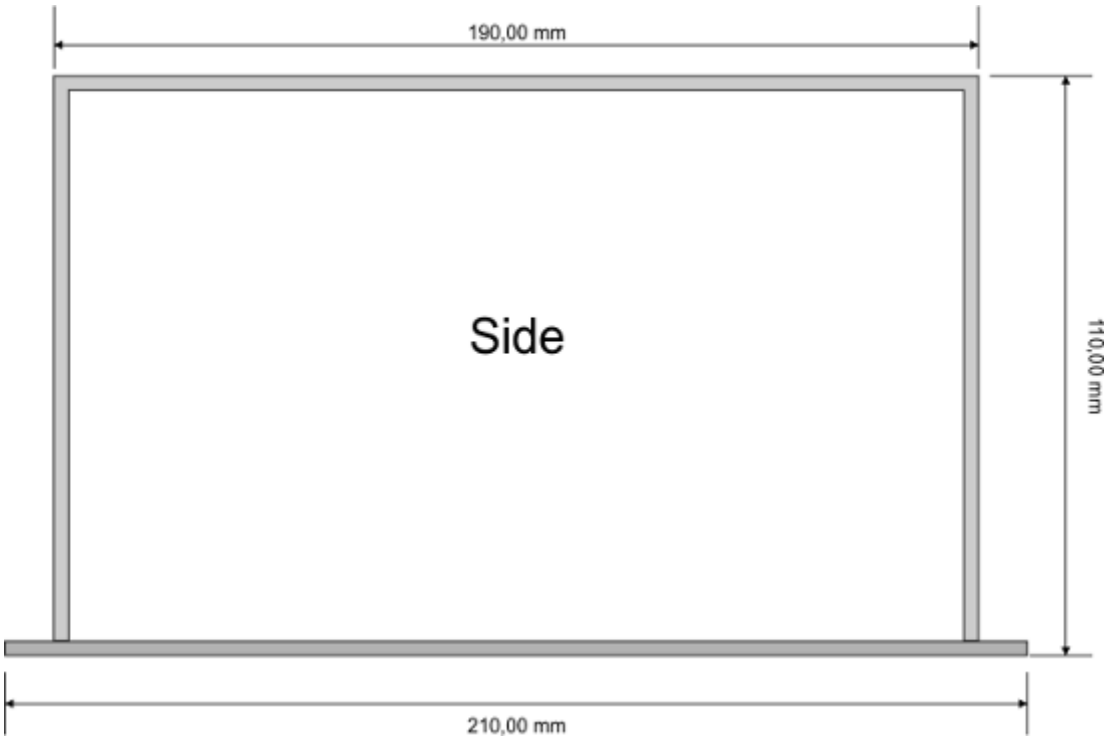

ONLY CPU

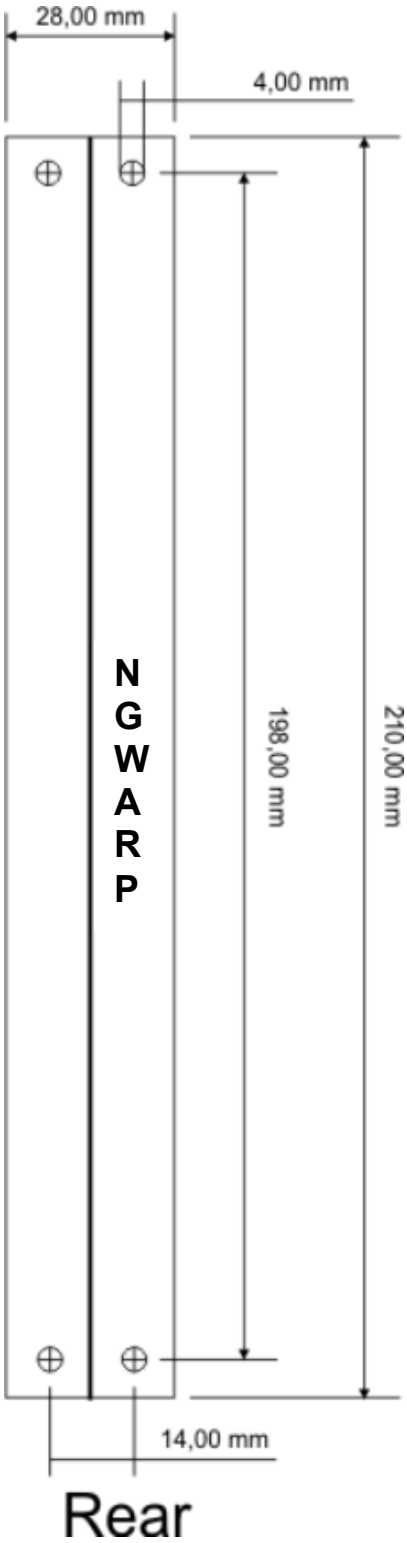

CPU WITH EXPANSIONS

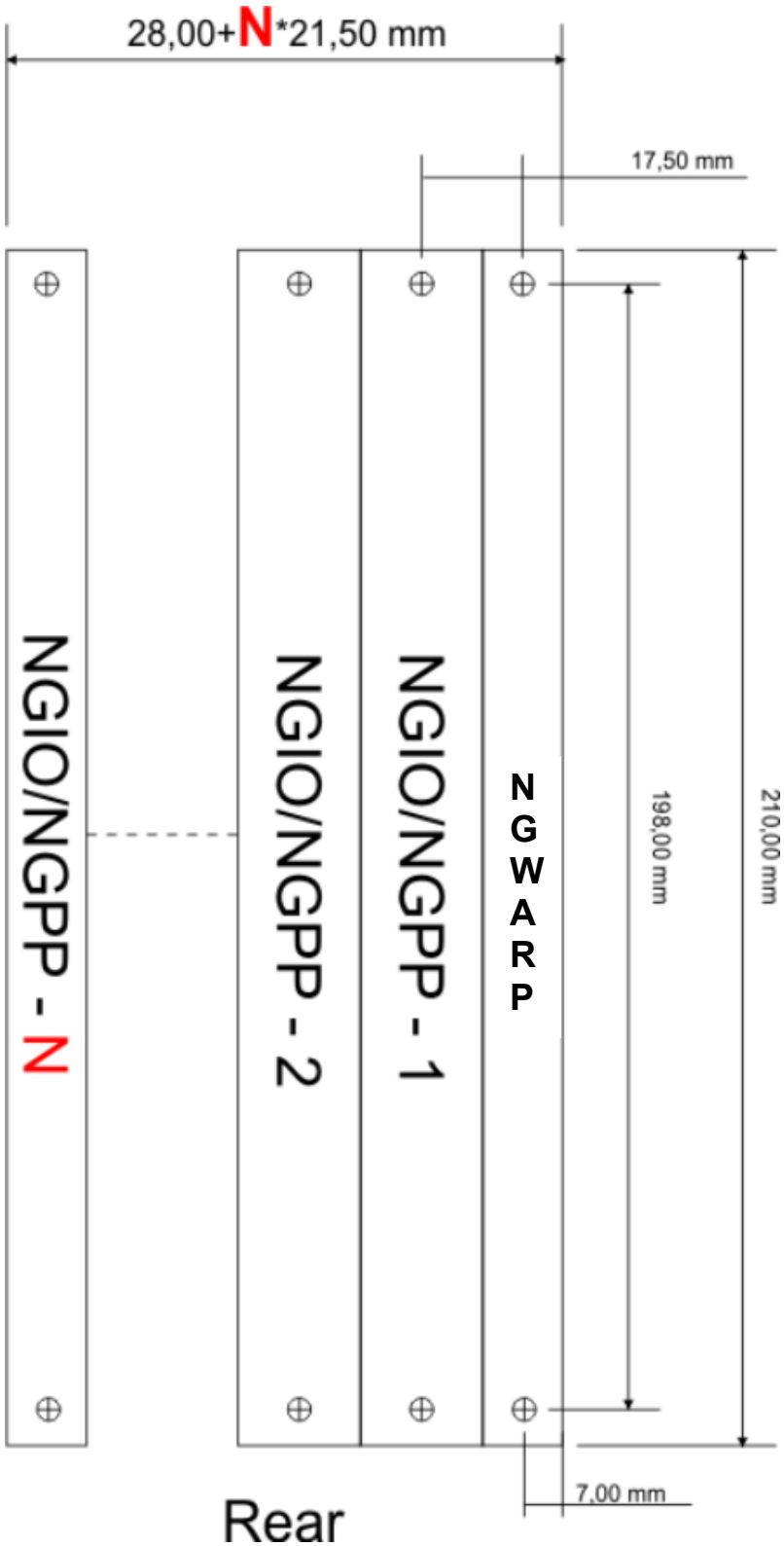

10 Notes on the CE legislation

NGWARP complies all the legislation about CE tagging.
We have two directives about electronic devices, regarding the NGWARP : la 2006/42/CE (machine directive) about safety use of the devices and 2004/108/CE about electromagnetic compatibility.
About the first (machine directive) electric/electronic devices, must complies the "low voltage" directive (2006/95/CE) but it can be applied on devices supplied at 50-1000Vac o 75-1500Vdc. NGWARP works at a voltage of 24Vdc (thus Intrinsically “safe”), so it belongs to "very low voltage" devices (class 0 legislation CEI 11.1), on which it isn't no legislation about.

On electromagnetic compatibility, regarding the 2004/108/CE norm, this device can be classified as a "finished appliance".Due to the fact that the NGWARP will be normally integrated inside a complex electromechanics system, the machine electric board, by a manufacturer in an industrial ambit and not by a final customer, it haven’t any certification duty.

PROMAX however, can institute some specific measure as a pre-compliance, in case of particular demands of costumers, regarding the device electromagnetic characterization.
For example, can be made some measure under the CEI EN 61000-6-1 norm (2007 generic norms – residential , commercial and light industrial ambient immunity) or CEI EN 61000-6-1 (2007 generic norms - residential , commercial and light industrial ambient emission)

Index

1 General characteristics 3
2 Order code 4
3 NGWARP connections 5
4 Connections description 6
4.1 Voltage supply 6
4.1.1 Caratteristiche elettriche 6
4.1.2 Electric characteristics 6
4.2 Serial ports 7
4.2.1 Connections J4 SER1/PROG – J5 SER2 8
4.3 CAN BUS 9
4.3.1 Connections 9
4.3.2 CanOpen Max PDO Number 11
4.3.3 CanOpen Cable 12
4.4 Ethernet Port 13
4.4.1 Connections 13
4.5 EtheCat Port 14
4.5.1 Connections 14
..... 14
4.6 Analog inputs 15
4.6.1 Connection Analog Inputs J7 15
4.6.2 Input Resistance 15
4.6.3 External resistance for voltages other than 0-10V or 4-20Ma 15
4.6.4 Connection example 15
5 Buttons Boot and Reset 16
5.1 Button Boot – LOG-MEM 16
5.2 Boot Safe Mode (only for Ethernet) 16
5.3 Manual Boot IN RS232 16
5.4 NGPROG 16
5.4.1 Upload firmware 16
5.4.2 Upload VTB application 16
6 Status Leds 17
7 NGIO connections 18
7.1 Digital inputs 19
7.1.1 Electric characteristics 19

7.1.2 Connections 19
7.2 Digital output 20
7.2.1 Electric characteristics 20
7.2.2 Connections 20
7.3 Encoder inputs 21
7.3.1 Electric characteristics 21
7.3.2 Electric characteristics +5vdc output encoder supply 21
7.3.3 Example 22
7.4 Servo Analog Outputs 23
7.4.1 Electric characteristics 23
8 NGPP Connections 24
8.1 Digital Inputs J13 - J14 NGPP 25
8.2 Digital Outputs J11 - J12 NGPP 25
8.3 STEP/DIR Outputs 26
8.4 Fast Digital Inputs J19 27
8.4.1 Electric characteristics 27
..... 27
8.5 Analog Outputs J19 28
8.5.1 Electric characteristics 28
9 Dimensions 29
10 Notes on the CE legislation 32